サンプルホルダー

【製品コード】

1) **SHOMTCH**：**K005型**円形/ハット型単結晶サンプルホルダー
2) **SHOMTCH**：**K005/K001型**円形ハット型単結晶サンプルホルダー
3) **SHOMTCHR**：**K102型**長方形単結晶サンプルホルダー
4) **SHUPSCH**：1”ウエハ固定サンプルホルダー
5) **SHOMEC13(MO-DT)**：13x電気接点/温度センサー付モリブデンサンプルホルダー
5) **SHOMEC13(CB-DT)**：13x電気接点/温度センサー付金メッキCuBe2サンプルホルダー
6) **SHOMEC13(MO)**：13x電気接点付モリブデンサンプルホルダー

【サンプルホルダー】

1)

2)

3)

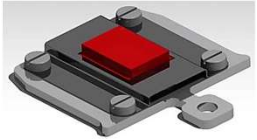

4)

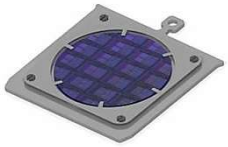

5)

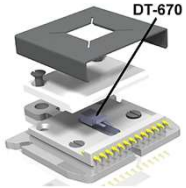

6)

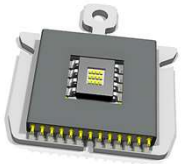

互換性【サンプルプレートレシーバー】

RECOM

RECOM13S

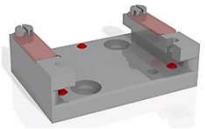

RHOMLT

RECOMLTRA

RECOMEC13

RECOMCREC13V2

RECOMDC

RECOMDCRA

RECOMHTR1001S

FERROVAC
ULTRA HIGH VACUUM TECHNOLOGY

サンプルホルダー

名称		円形/ハット型単結晶サンプルホルダー	円形/ハット型単結晶サンプルホルダー	長方形単結晶サンプルホルダー	1”ウエハ固定サンプルホルダー
外観図				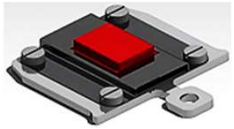	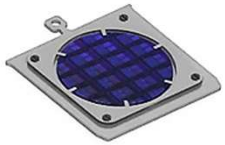
製品コード		SHOMTCH(MO)-0008-0001-0007	SHOMTCH(MO)-0010-0001-0009	SHOMTCHR(MO)-0007-0007-0001	SHUPSCH
仕様	単結晶形状	タイプK005	タイプK005/K001	タイプK102	ー
	サンプルサイズ	X=φ4～φ12mm, Y=1～5mm	X=φ10mm, Y=1mm, Z=φ9mm	X=7mm, Y=7mm, Z=1mm	ー
	本体材料	モリブデン (Mo)			ステンレス (SUS304)
	キャップ材料	モリブデン (Mo)			ステンレス (SUS304)
	取付ネジ	4x(M1.4x1)			
	取付ネジ材料	タンタル (Ta)			モリブデン (Mo)
	組立図	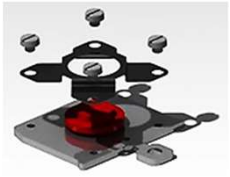	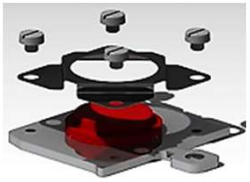	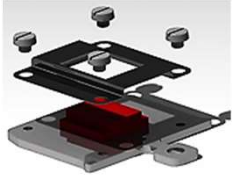	

13x電気接点付モリブデンサンプルホルダー

名称		13x電気接点付モリブデンサンプルホルダー
外観図		
概要		・**キネマティックスナップイン機構(三点支持機構)による再現性のある位置決め：** このサンプルホルダーをサンプルレシーバーにセットしたときの位置決めのためにスリット(3個)付サンプルプレート(SHOM3S)を導入することで、サンプルレシーバー(RECOMEC13V2/RECOMEC13)に配置された3個のルビー球にマイクロメートルレンジの精度で正確に再現性よくスナップインすることができます。 ・AINアイソレーターにある最大13個の電気高品質スプリングコンタクトによるデバイス配線： ・サンプル取付プレートの下にあるAINアイソレータースリットには、DT-670シリコンダイオード温度センサー、熱電対、Pt100抵抗を設置することができます。 ・上図の【アプリケーション例】は、SOIC-08(8ピン：2x4ピン)表面実装(SMT: Surface Mount type)ソケットの取付を示しています。
製品コード		SHOMEC13(MO)
仕様	プローブコンタクト数	13個 (コントクトストローク：0.235mm)
	サンプルプレート	3xスリット付サンプルプレート(SHOM3S)
	シールドキャップ窓	6×6mm (オプション：3x3mm/4x4mm/5x5mm)
	最高温度	180℃
	AINアイソレータースリット	オプション取付部品：DT-670シリコンダイオード温度センサー、熱電対、Pt100抵抗体
	材料	極低温・フルUHV適合材料
	・サンプルプレート	モリブデン (MO)) (オプション：CuBe2 / SUS304)
	・AINアイソレーター	シェイパルM (AIN：マシナブル窒化アルミニウムセラミックス)
	・サンプル取付プレート	シェイパルM (AIN：マシナブル窒化アルミニウムセラミックス)
	・シールドキャップ	モリブデン (MO) (オプション：CuBe2 / SUS304)
	・コンタクト	弱磁性Ni金メッキベリリウム銅合金 (CuBe2)
	サンプルレシーバー	RECOMCREC13V2/RECOMEC13

13x電気接点/温度センサー付サンプルホルダー

名称		13x電気接点/温度センサー付モリブデンサンプルホルダー	13x電気接点/温度センサー付金メッキCuBe2サンプルホルダー
外観図		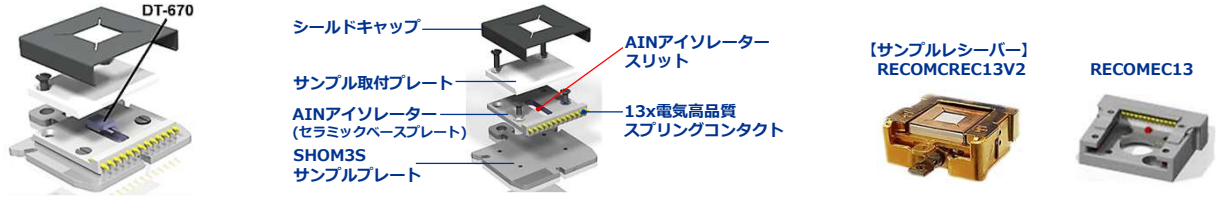	
概要		**1) サンプルの正確な温度測定：** **DT-670シリコンダイオード温度センサー**を**サンプル取付プレート**の真下に配置し、直接サンプルの裏面にぴったりと密着させて正確な温度測定を実現しています。 **2) キネマティックスナップイン機構(三点支持機構)による再現性のある位置決め：** このサンプルホルダーをサンプルレシーバーにセットしたときの位置決めのために**スリット(3個)付サンプルプレート(SHOM3S)**を導入することで、**サンプルレシーバー(RECOMEC13V2/RECOMEC13)**に配置された3個のルビー球にマイクロメートルレンジの精度で正確に再現性よくスナップインすることができます。 **3) AINアイソレーターにある最大13個の電気的高品質スプリングコンタクトによるデバイス配線：** **4) モリブデン製ベースプレートとシールドキャップによる高い熱伝導性と低いCTE(熱膨張率)の実現：** 熱膨張による変形防止のためにサンプルプレートとサンプル取付プレートの材料には高熱伝導率・熱膨張係数が殆ど変わらない**モリブデン**と**シェイパルM**を採用。 **高熱伝導率：100-140(W/m/K) (@20℃)** **低熱膨張率：シェイパルM/4.8 | MO/5.35（10E-6/K）**	
製品コード		SHOMEC13(MO-DT)	SHOMEC13(CB-DT)
仕様	プローブコンタクト数	13個 (コントクトストローク：0.235mm)	
	サンプルプレート	3xスリット付サンプルプレート**(SHOM3S)**	
	シールドキャップ窓	6×6mm	
	最高温度	180℃	
	内蔵温度センサー	**AINアイソレーター内蔵：DT-670**シリコンダイオード温度センサー (Lake Shore Cryotronics社製)	
	材料	極低温・フルUHV適合材料	
	・サンプルプレート	モリブデン (MO)	弱磁性Ni金メッキベリリウム銅合金 (CUBe2)
	・AINアイソレーター	シェイパルM (AIN：窒化アルミニウムセラミックス)	
	・サンプル取付プレート	シェイパルM (AIN：窒化アルミニウムセラミックス)	
	・シールドキャップ	モリブデン (MO)	弱磁性Ni金メッキベリリウム銅合金 (CuBe2)
	・コンタクト	弱磁性Ni金メッキベリリウム銅合金 (CuBe2)	
	サンプルレシーバー	RECOMCREC13V2/RECOMEC13	RECOMEC13(LT)

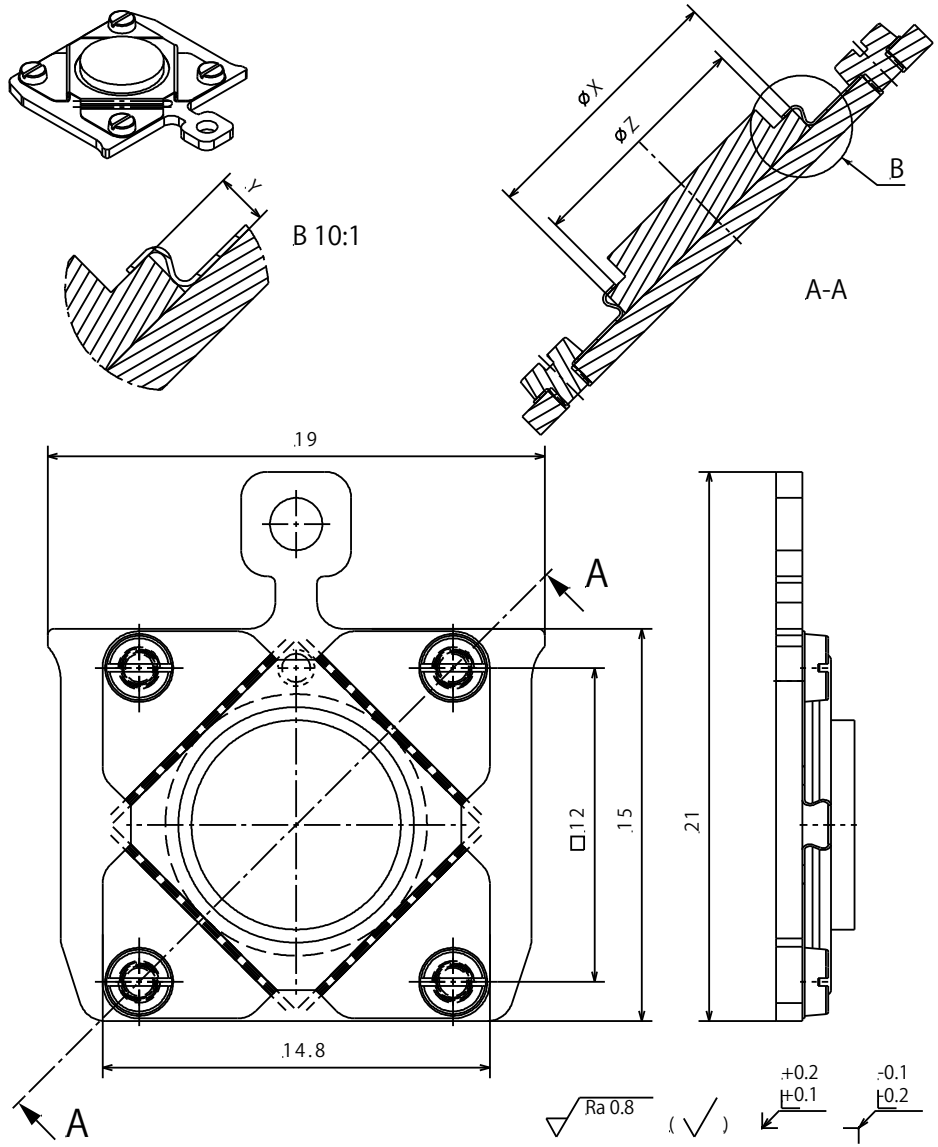

Material: According to Order	nominal dimensions ≤30mm DIN ISO 2768-f-H; >30mm DIN ISO 2768-m-K excluding Sym./Runout		
Sample Holder for round or quadratic Single Crystals	Sym./Runout >30mm DIN ISO 2768-H		
	formed part dimensions DIN ISO 2768-f-H		
SHOMT	Scale	Drawn	Vassalli
	5:1	Date	30.01.2019
		Changed	20.09.2020 JB
Ferrovac GmbH CH-8050 Zurich	THE INFORMATION CONTAINED IN THIS DRAWING IS THE SOLE PROPERTY OF FERROVAC GMBH. ANY REPRODUCTION IN PART OR AS WHOLE WITHOUT OUR PERMISSION IS PROHIBITED.	Rev. B	SHOMTCH A4.sheet 1/1

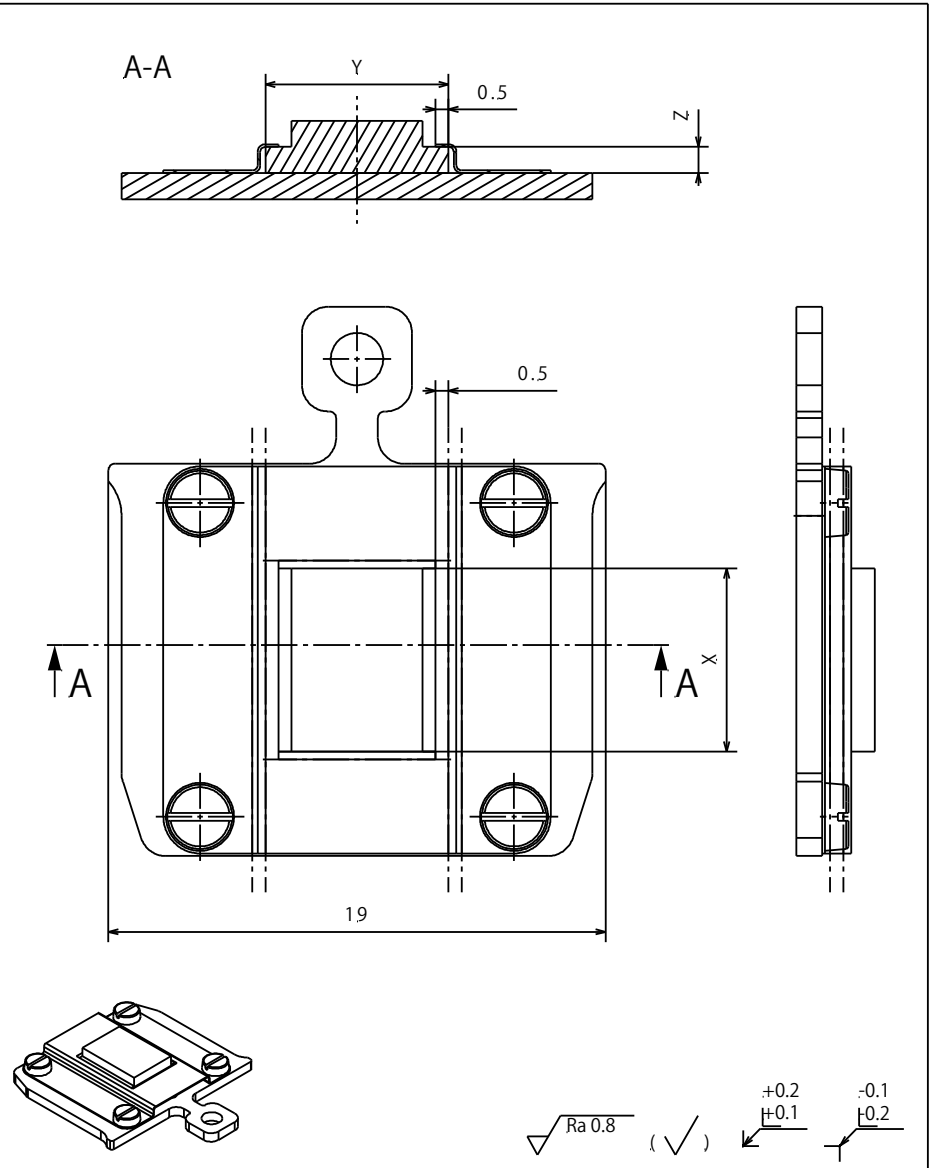

Material: gem. Bestellung	nominal dimensions ≤30mm DIN ISO 2768-f-H; >30mm DIN ISO 2768-m-K excluding Sym./Runout		
Sample Holder for Single Crystals	Sym./Runout >30mm DIN ISO 2768-H		
	formed part dimensions DIN ISO 2768-f-H		
SHOMT	Scale	Drawn	Name
	5:1 2:1	Date	30.01.2019
		Changed	Vassalli
Ferrovac GmbH CH-8050 Zurich	THE INFORMATION CONTAINED IN THIS DRAWING IS THE SOLE PROPERTY OF FERROVAC GMBH. ANY REPRODUCTION IN PART OR AS WHOLE WITHOUT OUR PERMISSION IS PROHIBITED.	Rev. A	SHOMTCHR A4.sheet 1/1

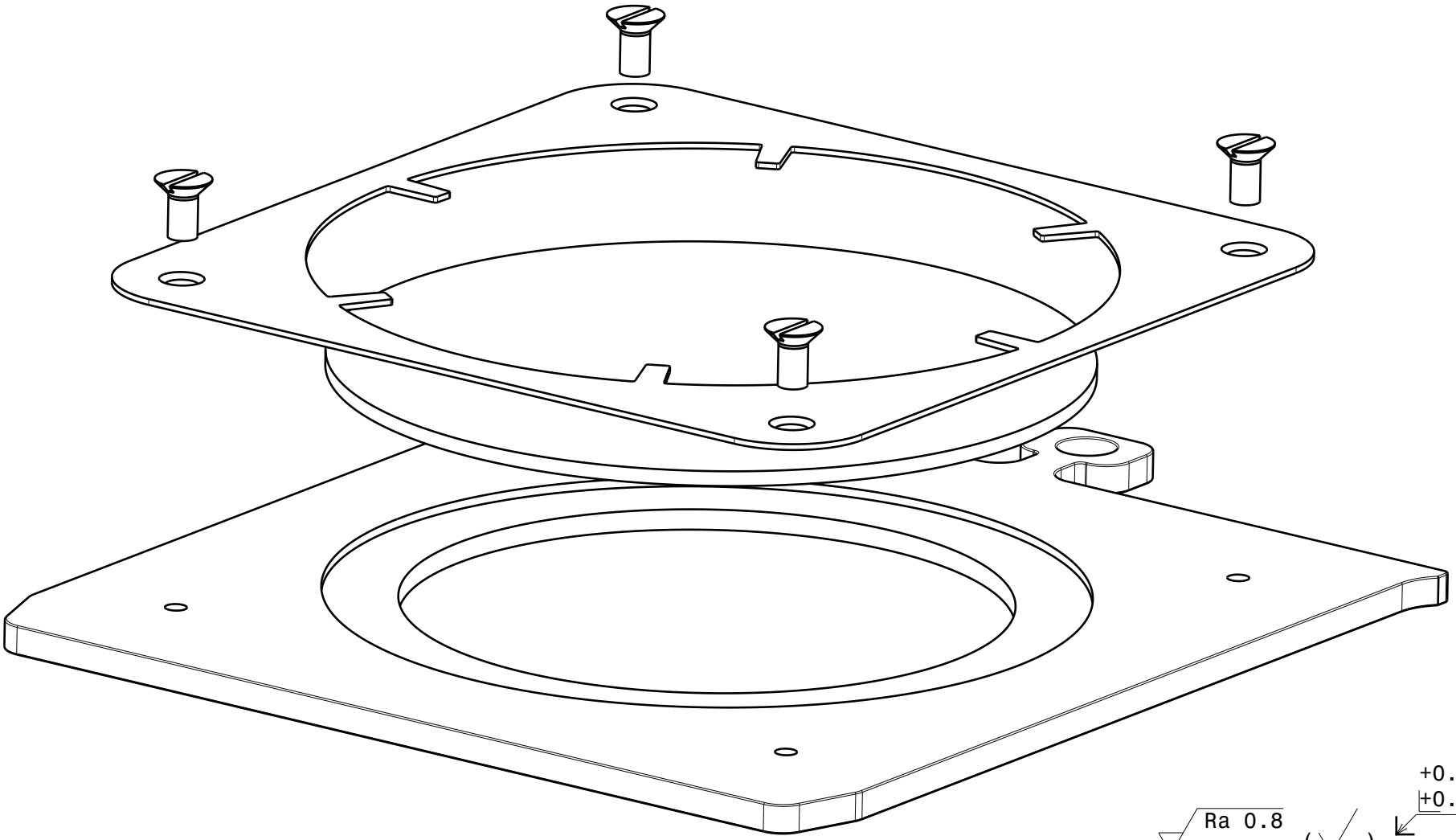

Ra 0.8 ( ) +0.2 +0.1 -0.1 -0.2

general tolerances ISO 2768-K

Material: fully UHV compatible	nominal over	1	6	30	100	300	1000
	dimension up to	6	30	100	300	1000	2000
Sample Holder for 1inch Wafer	tolerance ±	0.05	0.1	0.3	0.5	0.8	1.2
	Scale	Drawn	C.Weiss				
	5:1	Date	12.07.2017				
		changed	25.08.20 CW				
Ferrovac GmbH ***CH-8050 Zurich***	THE INFORMATION CONTAINED IN THIS DRAWING IS THE SOLE PROPERTY OF FERROVAC GMBH. ANY REPRODUCTION IN PART OR AS WHOLE WITHOUT OUR PERMISSION IS PROHIBITED.	Rev. B	**SHOMCH**				
			A4 sheet 1/1				

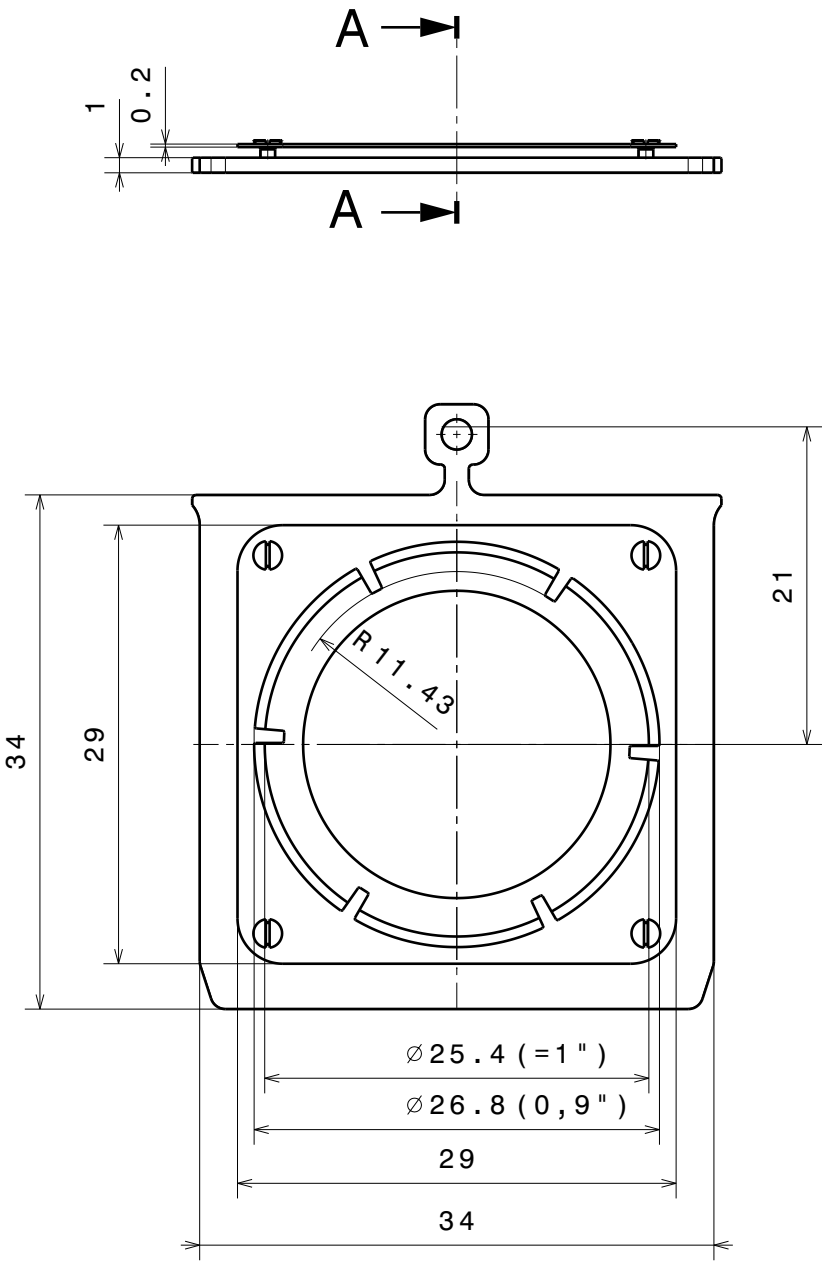

Application Example

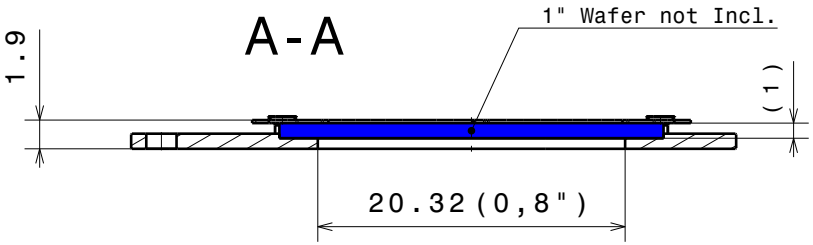

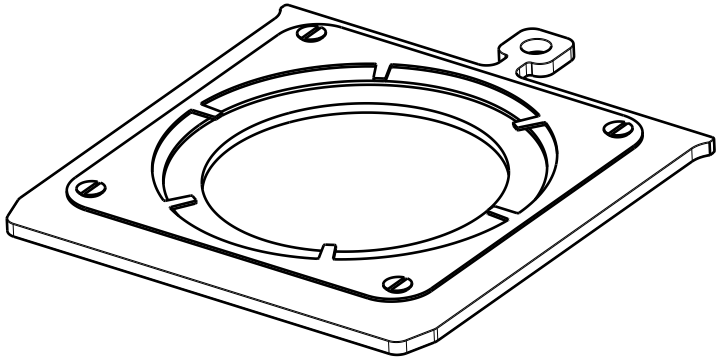

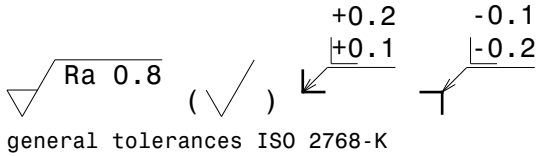

Material: fully UHV compatible	nominal dimension tolerance	over	1	6	30	100	300	1000
		up to	6	30	100	300	1000	2000
		±	0.05	0.1	0.3	0.5	0.8	1.2
Sample Holder for 1inch Wafer	Scale		Drawn		C.Weiss			
	2:1		Date		12.07.2017			
			changed		25.08.20 CW			
Ferrovac GmbH ***CH-8050 Zurich***	Rev.	B	**SHUPSCH** **A4** sheet 1/1					

THE INFORMATION CONTAINED IN THIS DRAWING IS THE SOLE PROPERTY OF FERROVAC GMBH. ANY REPRODUCTION IN PART OR AS WHOLE WITHOUT OUR PERMISSION IS PROHIBITED.

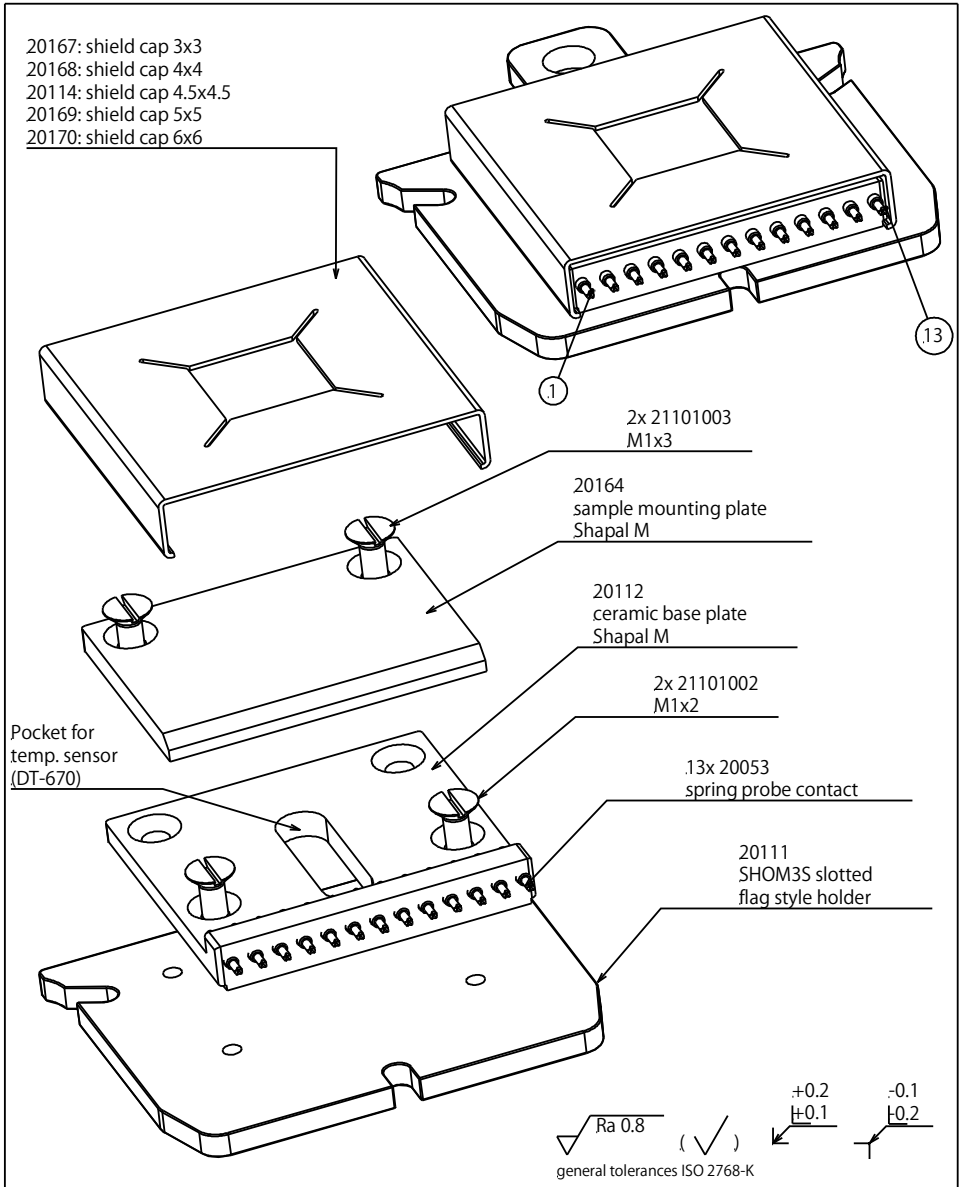

Material: ,...

Sample plate with 13 el. contacts
and slits for snap-in lock

nominal dimension	over	1	6	30	100	300	1000
tolerance	up to	6	30	100	300	1000	2000
	±	0.05	0.1	0.3	0.5	0.8	1.2

Scale	5:1
Drawn	U. Maier
Date	01.04.2014
Changed	23.05.14 UM
Rev.	B

Ferrovac GmbH
CH-8050 Zurich

THE INFORMATION CONTAINED IN THIS DRAWING IS THE SOLE PROPERTY OF FERROVAC GMBH. ANY REPRODUCTION IN PART OR AS WHOLE WITHOUT OUR PERMISSION IS PROHIBITED.

SHOMEC13
sheet 1/2

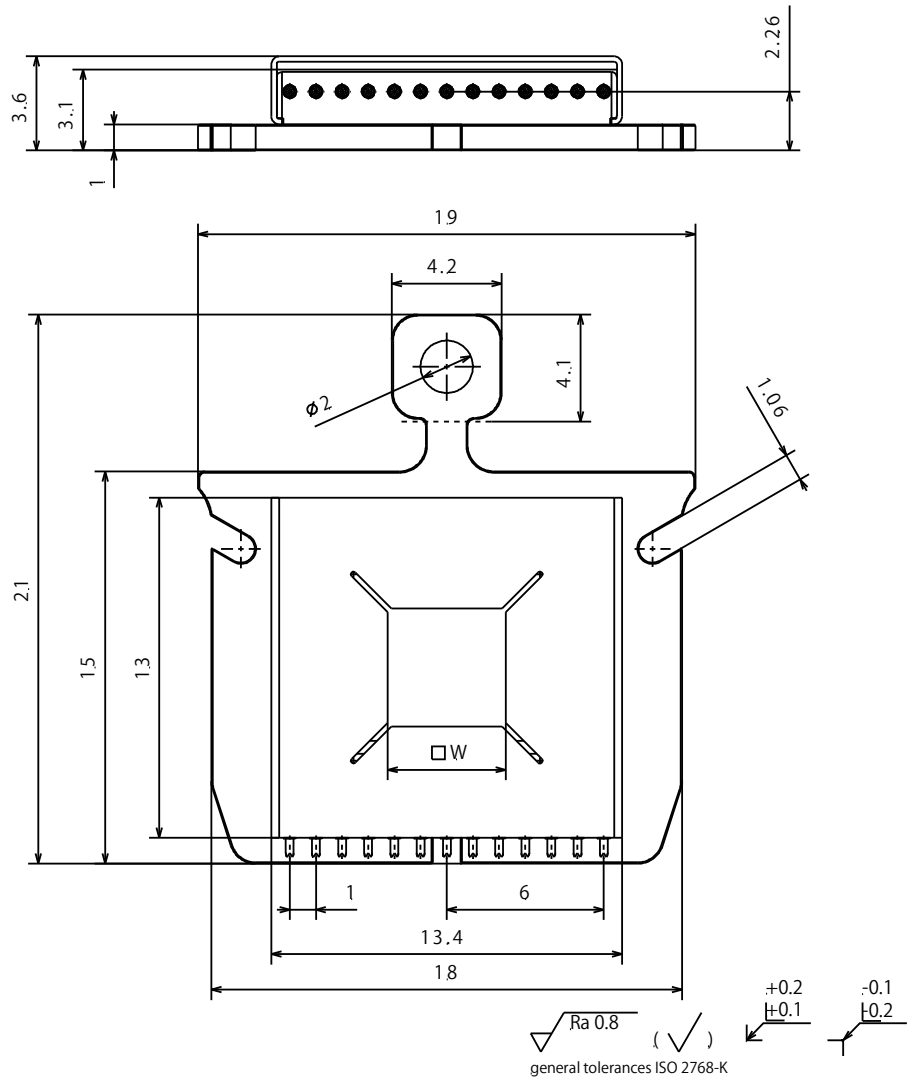

Material: ,...

Sample plate with 13 el. contacts
and slits for snap-in lock

nominal dimension	over	1	6	30	100	300	1000
tolerance	up to	6	30	100	300	1000	2000
	±	0.05	0.1	0.3	0.5	0.8	1.2

Scale	5:1
Drawn	U. Maier
Date	01.04.2014
Changed	23.05.14 UM
Rev.	B

Ferrovac GmbH
CH-8050 Zurich

THE INFORMATION CONTAINED IN THIS DRAWING IS THE SOLE PROPERTY OF FERROVAC GMBH. ANY REPRODUCTION IN PART OR AS WHOLE WITHOUT OUR PERMISSION IS PROHIBITED.

SHOMEC13
sheet 2/2

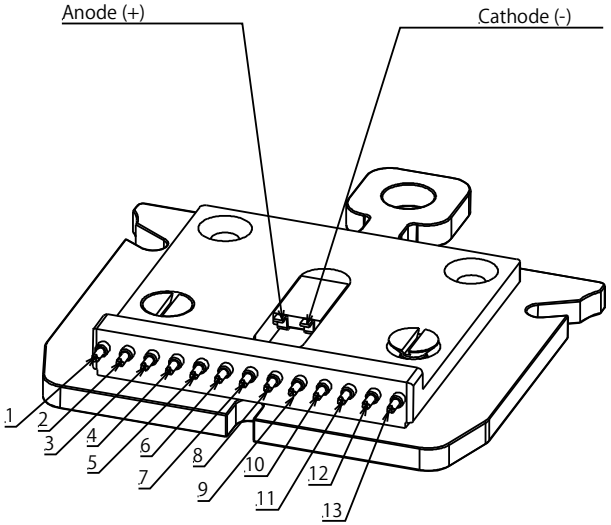

Pin	usage
1	
2	
3	
4	
5	
6	DT670 SD +
7	DT670 SD +
8	DT670 SD -
9	DT670 SD -
10	
11	
12	
13	

Material: ,...

Sample plate with 13 el. contacts
and slits for snap-in lock

nominal dimension	over	1	6	30	100	300	1000
tolerance	up to	6	30	100	300	1000	2000
	±	0.05	0.1	0.3	0.5	0.8	1.2

Scale: 5:1

Drawn: U. Maier
Date: 01.04.2014
Changed: 23.05.2019 CW

Ferrovac GmbH
CH-8050 Zurich

THE INFORMATION CONTAINED IN THIS DRAWING IS THE SOLE PROPERTY OF FERROVAC GMBH. ANY REPRODUCTION IN PART OR AS WHOLE WITHOUT OUR PERMISSION IS PROHIBITED.

Rev. C

SHOMEC13(MO-DT)
sheet 2/3

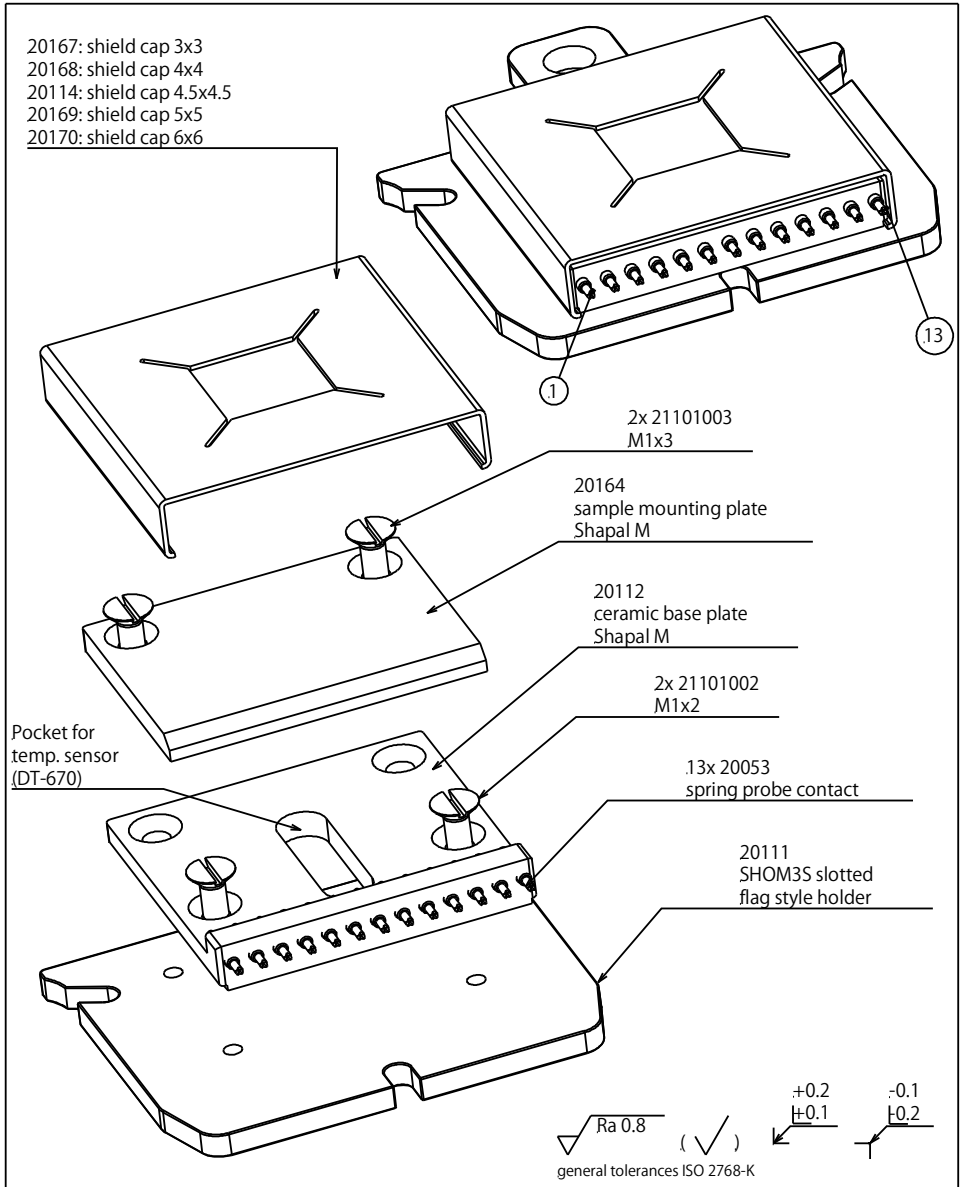

Material: ,...

Sample plate with 13 el. contacts
and slits for snap-in lock

nominal dimension	over	1	6	30	100	300	1000
tolerance	up to	6	30	100	300	1000	2000
	±	0.05	0.1	0.3	0.5	0.8	1.2

Scale: 5:1

Drawn: U. Maier
Date: 01.04.2014
Changed: 23.05.14 UM

Ferrovac GmbH
CH-8050 Zurich

THE INFORMATION CONTAINED IN THIS DRAWING IS THE SOLE PROPERTY OF FERROVAC GMBH. ANY REPRODUCTION IN PART OR AS WHOLE WITHOUT OUR PERMISSION IS PROHIBITED.

Rev. B

SHOMEC13(MO-DT)
sheet 1/3

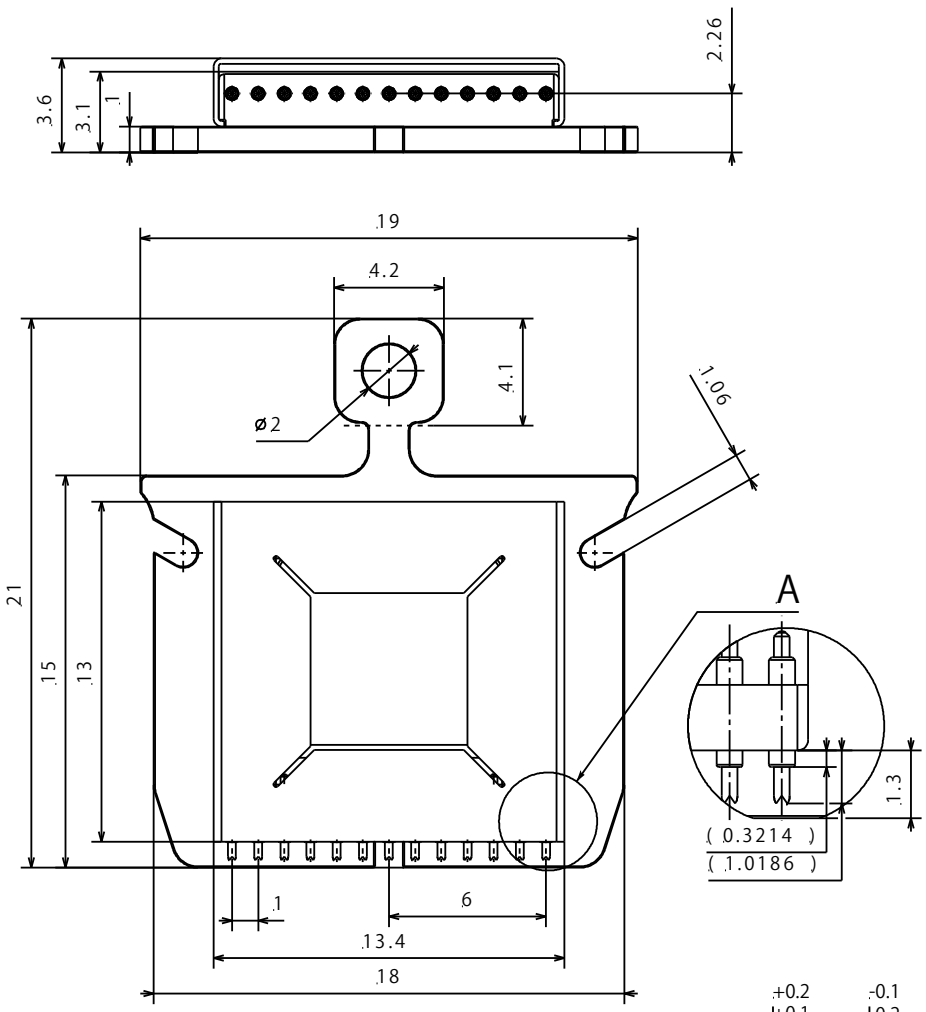

Material: ,...

Sample plate with 13 el. contacts
and slits for snap-in lock

nominal dimension	over	1	6	30	100	300	1000
tolerance	up to	6	30	100	300	1000	2000
	±	0.05	0.1	0.3	0.5	0.8	1.2

Scale	5:1
Drawn	U. Maier
Date	01.04.2014
Changed	23.05.2019 CW
Rev.	C

SHOMEC13(MO-DT)
sheet 2/3

Ferrovac GmbH
CH-8050 Zurich

THE INFORMATION CONTAINED IN THIS DRAWING IS THE SOLE PROPERTY OF FERROVAC GMBH. ANY REPRODUCTION IN PART OR AS WHOLE WITHOUT OUR PERMISSION IS PROHIBITED.

DT-670 Silicon Diodes

DT-670-SD features

- Best accuracy across the widest useful temperature range—1.4 K to 500 K—of any silicon diode in the industry
- Tightest tolerances for 30 K to 500 K applications of any silicon diode to date
- Rugged, reliable Lake Shore SD package designed to withstand repeated thermal cycling and minimize sensor self-heating
- Conformance to standard DT-670 temperature response curve
- Variety of packaging options

DT-670E-BR features

- Temperature range: 1.4 K to 500 K
- Bare die sensors with the smallest size and fastest thermal response time of any silicon diode on the market today
- Non-magnetic sensor

DT-621-HR features

- Temperature range: 1.4 K to 325 K (uncalibrated down to 20 K)
- Non-magnetic package
- Exposed flat substrate for surface mounting

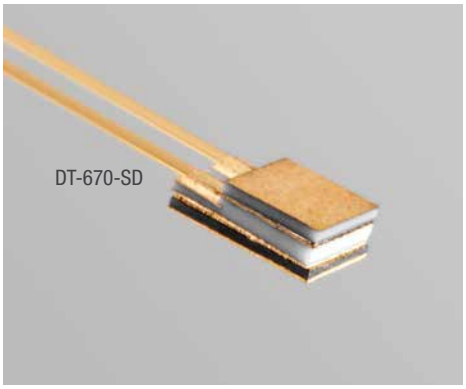

DT-670 Series silicon diodes offer better accuracy over a wider temperature range than any previously marketed silicon diodes. Conforming to the Curve DT-670 standard voltage versus temperature response curve, sensors within the DT-670 series are interchangeable, and for many applications do not require individual calibration. DT-670 sensors in the SD package are available in four tolerance bands—three for general cryogenic use across the 1.4 K to 500 K temperature range, and one that offers superior accuracy for applications from 30 K to room temperature.

DT-670-SD diodes are available with calibration across the full 1.4 K to 500 K temperature range.

The bare die sensor, the DT-670E-BR, provides the smallest physical size and fastest thermal response time of any silicon diode on the market today. This is an important advantage for applications where size and thermal response time are critical, including focal plane arrays and high temperature superconducting filters for cellular communication.

Packaging options

BO, BR, CO, CU, CY, DI, ET, LR, MT

CAUTION: These sensors are sensitive to electrostatic discharge (ESD). Use ESD precautionary procedures when handling, or making mechanical or electrical connections to these devices in order to avoid performance degradation or loss of functionality.

The Lake Shore SD package — the most rugged, versatile package in the industry

The SD package, with direct sensor-to-sapphire base mounting, hermetic seal, and brazed Kovar leads, provides the industry's most rugged, versatile sensors with the best sample to chip connection. Designed so heat coming down the leads bypasses the chip, it can survive several thousand hours at 500 K (depending on model) and is compatible with most ultra high vacuum applications. It can be indium soldered to samples without shift in sensor calibration. If desired, the SD package is also available without Kovar leads.

Typical DT-670 diode voltage

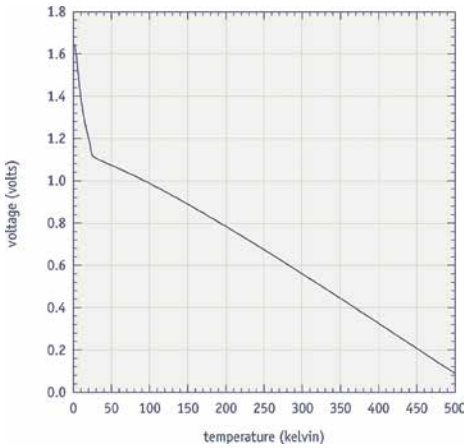

Typical DT-670 diode sensitivity

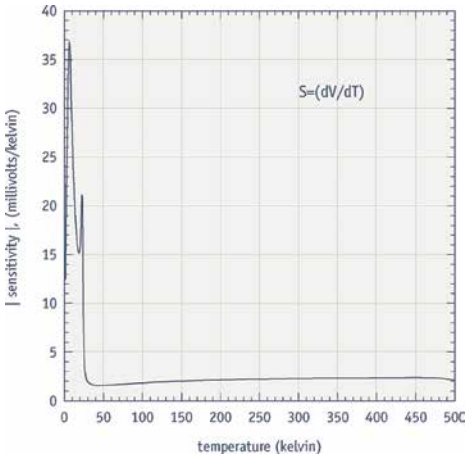

Specifications

Standard curve Curve DT-670—see next page

Recommended excitation 10 µA ±0.1%

Max reverse voltage 40 V

Max current before damage 1 mA continuous or 100 mA pulsed

Dissipation at recommended excitation 16 µW at 4.2 K; 10 µW at 77 K; 5 µW at 300 K

Thermal response time SD: typical <10 ms at 4.2 K, 100 ms at 77 K, 200 ms at 305 K; BR: 1 ms at 4.2 K, 13 ms at 77 K, 20 ms at 305 K

Use in radiation Recommended for use only in low level radiation—see Appendix B

Use in magnetic field Not recommended for use in magnetic field applications below 60 K. Low magnetic field dependence when used in fields up to 5 tesla above 60 K—see Appendix B

Reproducibility[1] ±10 mK at 4.2 K

Soldering standard J-STD-001 Class 2

[1] Short-term reproducibility data is obtained by subjecting sensor to repeated thermal shocks from 305 K to 4.2 K

Range of use

Package	Minimum limit	Maximum limit
SD, CU-HT, BR	1.4 K	500 K
CU, LR, CY, ET, MT, BO, HR	1.4 K	420 K

DT-621-HR miniature silicon diode

The DT-621 miniature silicon diode temperature sensor is configured for installation on flat surfaces. Due to the absence of magnetic materials in its construction, this package is suited for applications where minimal interaction between the diode and sample space magnetic field is desired. The DT- 621 sensor package exhibits precise, monotonic temperature response over its useful range. The sensor chip is in direct contact with the epoxy dome, which causes increased voltage below 20 K and prevents full range Curve DT-670 conformity. For use below 20 K, calibration is required.

DT-621-HR

Calibrated accuracy

	Typical sensor accuracy[2]
1.4 K	±12 mK
4.2 K	±12 mK
10 K	±12 mK
77 K	±22 mK
300 K	±32 mK
500 K	±50 mK

[2] $[(\text{Calibration uncertainty})^2 + (\text{reproducibility})^2]^{0.5}$ for more information see Appendices B, D, and E

Temperature response data table (typical)

	DT-670		DT-621-HR	
	V (volts)	dV/dT (mV/K)	V (volts)	dV/dT (mV/K)
1.4 K	1.64	-12.5	—	—
4.2 K	1.58	-31.6	1.678	-35
10 K	1.38	-26.8	—	—
77 K	1.03	-1.73	1.03	1.73
305 K	0.560	-2.30	0.560	-2.3

See Appendix G for expanded response table

Long-term stability

	Use to 305 K[3]	Use to 500 K[4]
4.2 K	±10 mK	±40 mK
77 K	±40 mK	±100 mK
305 K	±25 mK	±50 mK
500 K	—	±150 mK

[3] Long-term stability data is obtained by subjecting sensor to 200 thermal shocks from 305 K to 77 K

[4] Based on 670 h of baking at 500 K

Standard curve DT-670 tolerance bands

	2 K to 100 K	100 K to 305 K	305 K to 500 K
Band A	±0.25 K	±0.5 K	±0.5 K
Band A1	±0.25 K	±1.5% of temp	±1.5% of temp
Band B	±0.5 K	±0.5 K	±0.33% of temp
Band B1	±0.5 K	±1.5% of temp	±1.5% of temp
Band C	±1 K	±1 K	±0.50% of temp

	30 K to 100 K	100 K to 305 K	305 K to 500 K
Band D[5]	±0.25 K	±0.50 K	±0.20% of temp

[5] For T < 30 K ±1.5 K

	2 K to 100 K	100 K to 500 K
DT-670E-BR	±1.5 K typical	±1.5% of temp typical

	20 K to 325 K
DT-621-HR	±2.5 K or ±1.5% of temperature, whichever is greater

Physical specifications

	Mass	Lead type	Lead polarity	Sensor materials used
DT-670-SD	37 mg	2—nickel and gold plated Kovar	Positive lead on right with package lid up and leads towards user	Sapphire base with alumina body & lid. Molybdenum/manganese metallization on base and lid top with nickel and gold plating. Gold tin solder as hermetic seal.
DT-670E-BR (bare die)	72.7 µg	None	Positive connection made through bottom of chip; negative connection made on base pad on top of chip	Silicon chip with aluminum metallization on chip contacts.
DT-621-HR	23 mg	2—platinum ribbon with tinned 60/40 SnPb solder	Positive lead is right-hand ribbon with platinum disk down and leads towards user	Sensing element is mounted to a platinum disk and covered with a dome of Stycast® 2850 epoxy

Typical magnetic field-dependent temperature errors[6] ΔT/T (%) at B (magnetic induction)

Package base parallel to field B	1 T	2 T	3 T	4 T	5 T
4.2 K	-200	-300	-350	-400	-500
20 K	-10	-20	-25	-30	-40
40 K	-4	-6	-8	-10	-12
60 K	-0.5	-1	-2	-3	-3.5
80 K	< 0.1	-0.5	-0.8	-1.1	-1.5
300 K	<-0.1	<-0.1	<-0.1	<-0.1	<-0.1

Package base perpendicular to field B	1 T	2 T	3 T	4 T	5 T
4.2 K	-8	-9	-11	-15	-20
20 K	-4	-5	-5	-5	-10
40 K	-1.5	-3	-4	-5	-5.5
60 K	-0.5	-0.7	-0.8	-1	-1.1
80 K	-0.1	-0.3	-0.5	-0.6	-0.7
300 K	<0.1	0.2	0.5	0.6	0.6

[6] To minimize magnetic field-induced temperature errors, the sensor should be oriented so that the package base is perpendicular to the magnetic field flux lines—this results in the diode current being parallel to the magnetic field

DT-670-SD

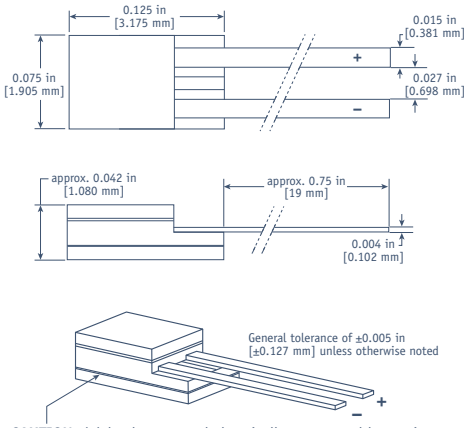

CAUTION: (+) lead connected electrically to external braze ring—take care not to cause a short

DT-670E-BR

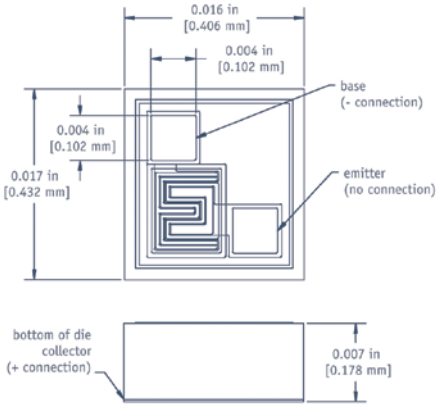

DT-621-HR

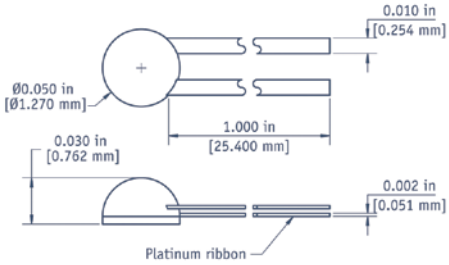

General tolerance of ±0.005 in [±0.127 mm] unless otherwise noted

DT-670 temperature response curve

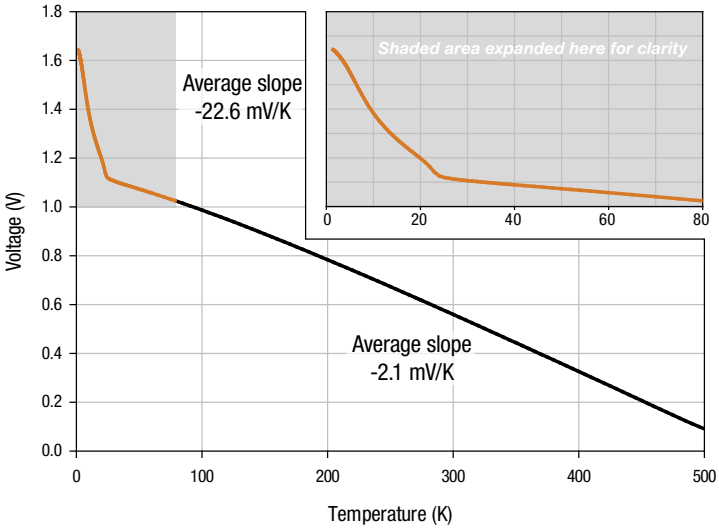

Curve DT-670 tolerance bands

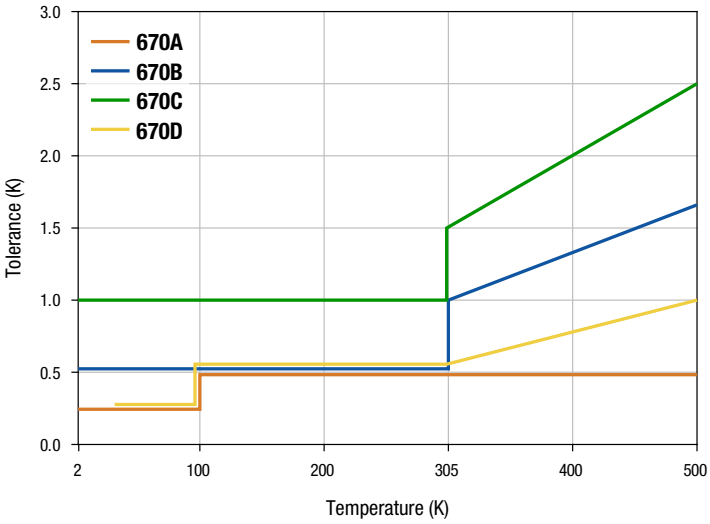

DT-670 Series expanded temperature response data table

T (K)	Voltage (V)	dV/dT (mV/K)	T (K)	Voltage (V)	dV/dT (mV/K)	T (K)	Voltage (V)	dV/dT (mV/K)	T (K)	Voltage (V)	dV/dT (mV/K)
1.4	1.644290	-12.5	**6.0**	1.51541	-36.7	**28.0**	1.110421	-2.25	**160.0**	0.868518	-2.07
1.5	1.642990	-13.6	**6.5**	1.49698	-36.9	**29.0**	1.108261	-2.08	**170.0**	0.847659	-2.10
1.6	1.641570	-14.8	**7.0**	1.47868	-36.2	**30.0**	1.106244	-1.96	**180.0**	0.826560	-2.12
1.7	1.640030	-16.0	**7.5**	1.46086	-35.0	**31.0**	1.104324	-1.88	**190.0**	0.805242	-2.14
1.8	1.638370	-17.1	**8.0**	1.44374	-33.4	**32.0**	1.102476	-1.82	**200.0**	0.783720	-2.16
1.9	1.636600	-18.3	**8.5**	1.42747	-31.7	**33.0**	1.100681	-1.77	**210.0**	0.762007	-2.18
2.0	1.634720	-19.3	**9.0**	1.41207	-29.9	**34.0**	1.098930	-1.73	**220.0**	0.740115	-2.20
2.1	1.632740	-20.3	**9.5**	1.39751	-28.3	**35.0**	1.097216	-1.70	**230.0**	0.718054	-2.21
2.2	1.630670	-21.1	**10.0**	1.38373	-26.8	**36.0**	1.095534	-1.69	**240.0**	0.695834	-2.23
2.3	1.628520	-21.9	**10.5**	1.37065	-25.5	**37.0**	1.093878	-1.64	**250.0**	0.673462	-2.24
2.4	1.626290	-22.6	**11.0**	1.35820	-24.3	**38.0**	1.092244	-1.62	**260.0**	0.650949	-2.26
2.5	1.624000	-23.2	**11.5**	1.34632	-23.2	**39.0**	1.090627	-1.61	**270.0**	0.628302	-2.27
2.6	1.621660	-23.6	**12.0**	1.33499	-22.1	**40.0**	1.089024	-1.60	**273.0**	0.621141	-2.28
2.7	1.619280	-24.0	**12.5**	1.32416	-21.2	**42.0**	1.085842	-1.59	**280.0**	0.605528	-2.28
2.8	1.616870	-24.2	**13.0**	1.31381	-20.3	**44.0**	1.082669	-1.59	**290.0**	0.582637	-2.29
2.9	1.614450	-24.4	**13.5**	1.30390	-19.4	**46.0**	1.079492	-1.59	**300.0**	0.559639	-2.30
3.0	1.612000	-24.7	**14.0**	1.29439	-18.6	**48.0**	1.076303	-1.60	**310.0**	0.536542	-2.31
3.1	1.609510	-25.1	**14.5**	1.28526	-17.9	**50.0**	1.073099	-1.61	**320.0**	0.513361	-2.32
3.2	1.606970	-25.6	**15.0**	1.27645	-17.3	**52.0**	1.069881	-1.61	**330.0**	0.490106	-2.33
3.3	1.604380	-26.2	**15.5**	1.26794	-16.8	**54.0**	1.066650	-1.62	**340.0**	0.466760	-2.34
3.4	1.601730	-26.8	**16.0**	1.25967	-16.3	**56.0**	1.063403	-1.63	**350.0**	0.443371	-2.34
3.5	1.599020	-27.4	**16.5**	1.25161	-15.9	**58.0**	1.060141	-1.64	**360.0**	0.419960	-2.34
3.6	1.596260	-27.9	**17.0**	1.24372	-15.6	**60.0**	1.056862	-1.64	**370.0**	0.396503	-2.35
3.7	1.59344	-28.4	**17.5**	1.23596	-15.4	**65.0**	1.048584	-1.67	**380.0**	0.373002	-2.35
3.8	1.59057	-29.0	**18.0**	1.22830	-15.3	**70.0**	1.040183	-1.69	**390.0**	0.349453	-2.36
3.9	1.58764	-29.6	**18.5**	1.22070	-15.2	**75.0**	1.031651	-1.72	**400.0**	0.325839	-2.36
4.0	1.58465	-30.2	**19.0**	1.21311	-15.2	**77.35**	1.027594	-1.73	**410.0**	0.302161	-2.37
4.2	1.57848	-31.6	**19.5**	1.20548	-15.3	**80.0**	1.022984	-1.75	**420.0**	0.278416	-2.38
4.4	1.57202	-32.9	**20.0**	1.197748	-15.6	**85.0**	1.014181	-1.77	**430.0**	0.254592	-2.39
4.6	1.56533	-34.0	**21.0**	1.181548	-17.0	**90.0**	1.005244	-1.80	**440.0**	0.230697	-2.39
4.8	1.55845	-34.7	**22.0**	1.162797	-21.1	**100.0**	0.986974	-1.85	**450.0**	0.206758	-2.39
5.0	1.55145	-35.2	**23.0**	1.140817	-20.8	**110.0**	0.968209	-1.90	**460.0**	0.182832	-2.39
5.2	1.54436	-35.6	**24.0**	1.125923	-9.42	**120.0**	0.949000	-1.94	**470.0**	0.159010	-2.37
5.4	1.53721	-35.9	**25.0**	1.119448	-4.60	**130.0**	0.929390	-1.98	**480.0**	0.135480	-2.33
5.6	1.53000	-36.2	**26.0**	1.115658	-3.19	**140.0**	0.909416	-2.01	**490.0**	0.112553	-2.25
5.8	1.52273	-36.5	**27.0**	1.112810	-2.58	**150.0**	0.889114	-2.05	**500.0**	0.090681	-2.12

Ordering information

Uncalibrated sensor
Step 1: Choose diode series, for example DT-670.
Step 2: Choose tolerance band (if applicable), for example DT-670A.
Step 3: Choose package or mounting adapter—if ordering adapter, substitute the adapter suffix for the SD suffix, for example DT-670A-CU.

Calibrated sensor
Step 1: Choose diode series, for example DT-670.
Step 2: Choose package or mounting adapter—if ordering adapter, substitute the adapter suffix for the SD suffix, for example DT-670-CU.
Step 3: Specify the calibration range suffix code after the model number and package suffix, for example DT-670-CU-1.4L.

DT-670	Calibration range suffix codes Numeric figure is the low end of the calibration Letters represent the high end: L=325 K, H=500 K				
Model number	Uncal	1.4L	1.4H	70L	70H
DT-621-HR	■	■			
DT-670A-SD	■				
DT-670A1-SD	■				
DT-670B-SD	■				
DT-670B1-SD	■				
DT-670C-SD	■				
DT-670D-SD	■				
DT-670-SD		■	■	■	■
Mounting adapters are available for use with the SD package— replace SD suffix with mounting adapter suffix					
CO	■	■	■	■	■
CU, LR, CY, ET, BO, MT	■	■		■	
CU-HT	■	■	■	■	■
DI	■				
DT-670E-BR-10	■	bare chip silicon diode sensor, quantity 10			

Note: upper temperature limit package dependent—see Sensor Packages section
Other packaging available by special order—please consult Lake Shore

Accessories available for sensors

SN-CO-C1	CO style sensor clamps for SD package
ECRIT	Expanded interpolation table
8000	Calibration report on CD-ROM
COC-SEN	Certificate of conformance

USD VISA MasterCard AMERICAN EXPRESS PayPal

Accessories suggested for installation—see Accessories section for full descriptions
Stycast® epoxy
Apiezon® grease
90% Pb, 10% Sn solder
Indium solder
VGE-7031 varnish
Phosphor bronze wire
Manganin wire

Packaging options

For more information on sensor packages and mounting adapters, see page 21.

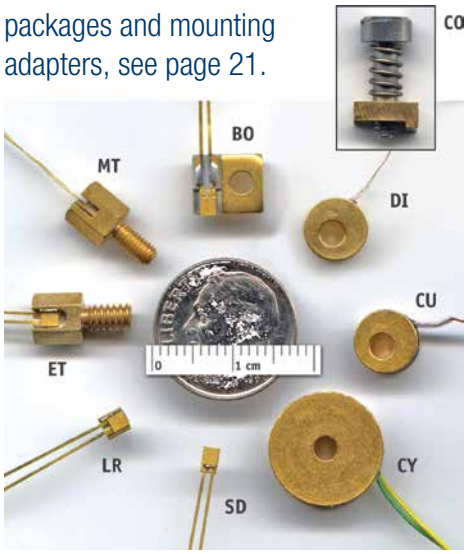

CO—spring loaded clamp for easy sensor interchangeability

Upgrade conversion chart

	From:	To:
Sensor	DT-470	DT-670
Band	11	A
	11A	A1
	12	B
	12A	B1
	13	C

See the appendices for a detailed description of:
Installation
Uncalibrated sensors
SoftCal™
Calibrated sensors
CalCurve™
Sensor packages

To add length to sensor leads, see page 25.